Docket S-030

Public comment

Interpretation of March 3, 2004 draft reg. text on power lines

By Hugh Pratt of InsulatUS Inc.

5 March 04

Assembly and Disassembly March 3 Working Draft

OPTION 1

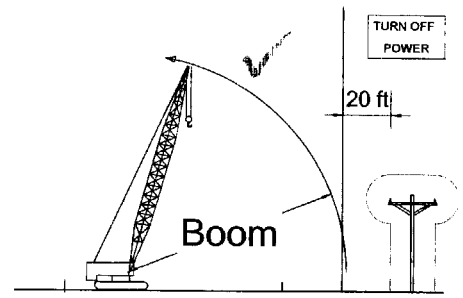

Assembly and Disassembly March 3 Working Draft

OPTION 2

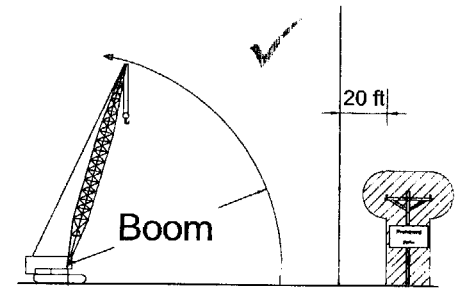

Assembly and Disassembly March 3 Working Draft

Option 3

Operator must have

1 Plan

2 Conductive resistant tag lines

3 Dedicated spotter

4. Proximity alarm OR range control OR movement control OR elevated line/barricade OR insulating link

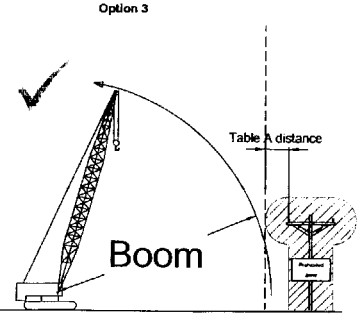

Assembly and Disassembly March 3 Working Draft

(b) (4) (c) & (d)

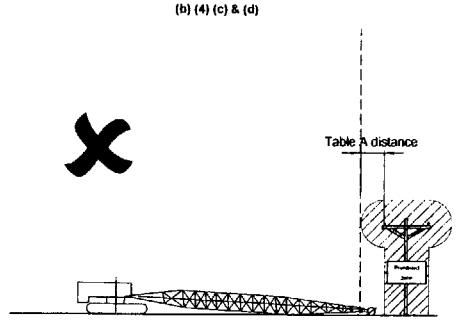

Crane operations (up to 350 kV)
March 3 Working Draft

Crane operations (up to 350 kV) March 3 Working Draft

Option 1

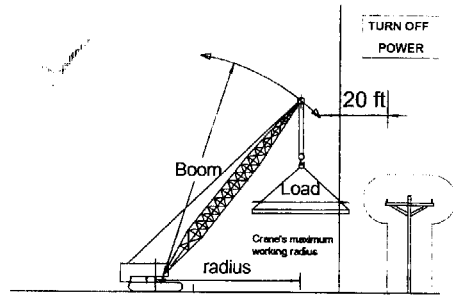

Crane operations (up to 350 kV) March 3 Working Draft

Option 2

Operator must have

1 Plan
2 Conductive resistant tag lines
3. [*Insulating link - discuss*]
4 2 of these Dedicated spotter ; range control ; movement control ; elevated line/barricade, insulating link

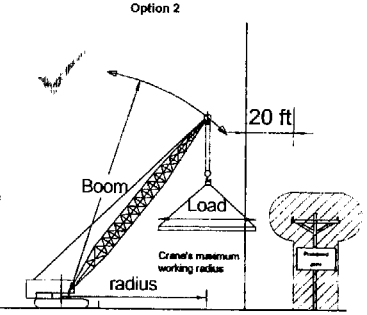

Crane operations (up to 350 kV) March 3 Working Draft

Option 3

Operator must have

1 Plan
2 Conductive resistant tag lines
3 [*Insulating link - discuss*]
4 2 of these Dedicated spotter ; range control ; movement control , elevated line/barricade, insulating link

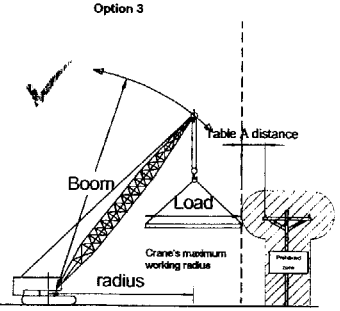

Crane operations (up to 350 kV) March 3 Working Draft

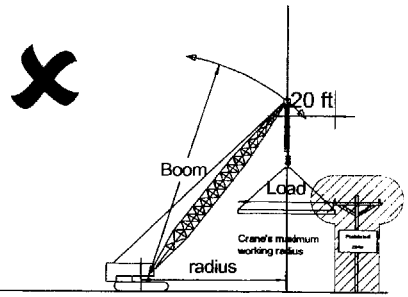

Crane operations (up to 350 kV) March 3 Working Draft

Operation inside Table A

Operator must have
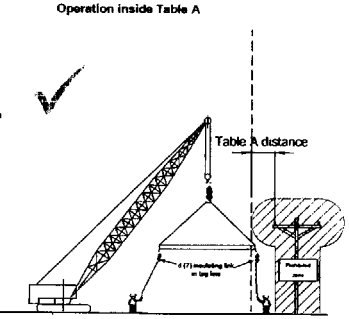
1 Plan
2 Deactivate power re-energiser
3 Dedicated spotter
4 elevated line/barricade
5. Insulating link
6. Conductive resistant rigging if possible
7 range control, if fitted
8 Insulating link in tag lines
9. Conductive resistant barricade
10 Prohibited from touching crane etc
11. Essential riggers only
12 Crane grounded